COLOR : 10YR7.5/14

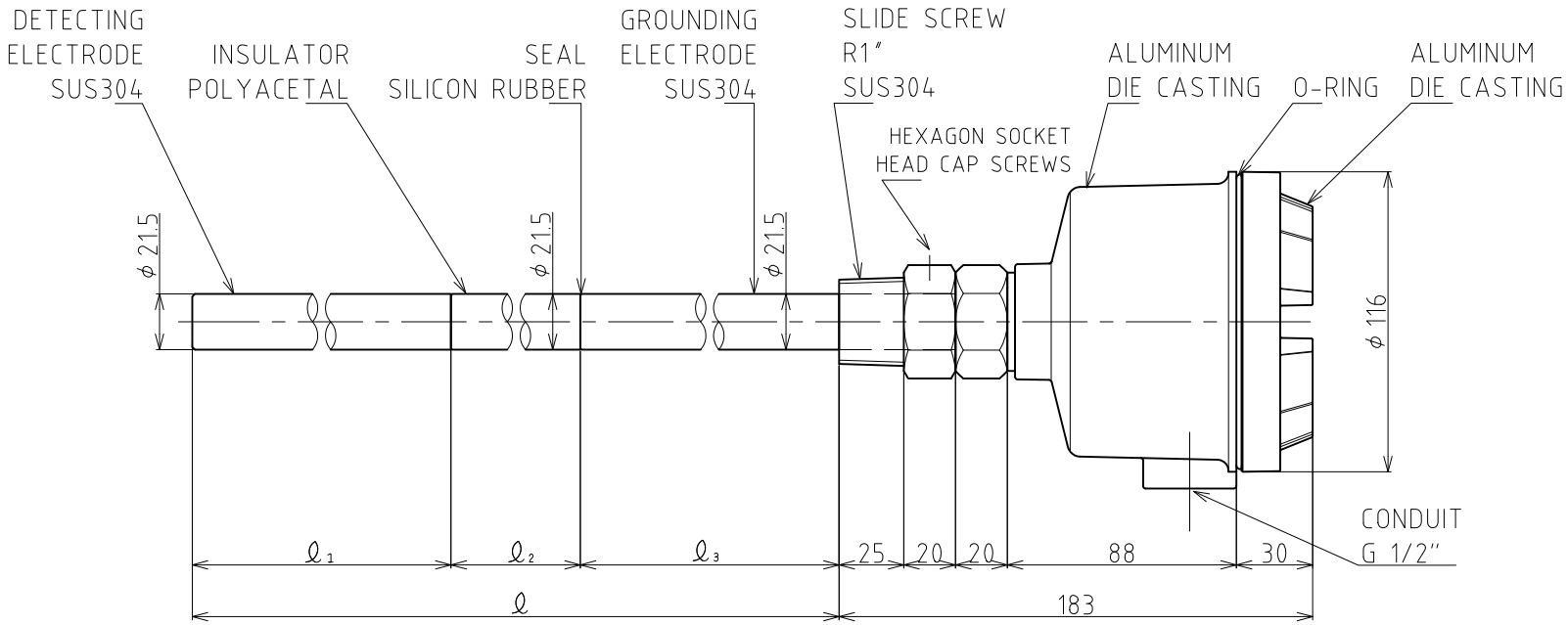

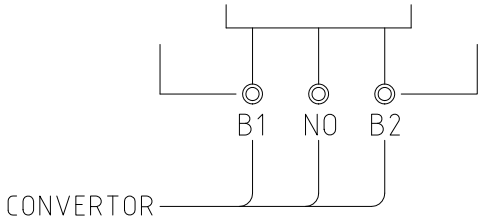

INTRINSIC SAFETY TYPE OF EXPLOTION-PROTECTION.
Explotion class and Ignition of explosive gases:ia3nG5.

	MODEL	ℓ	ℓ1	ℓ2	ℓ3	NOTE	Q'ty		MODEL	ℓ	ℓ1	ℓ2	ℓ3	NOTE	Q'ty
	TSE-A3SA-025	250	100	50	100				TSE-A3SA-065	650	150	50	450		
	TSE-A3SA-030	300	100	50	150				TSE-A3SA-070	700	150	50	500		
	TSE-A3SA-035	350	100	50	200				TSE-A3SA-075	750	150	50	550		
	TSE-A3SA-040	400	100	50	250				TSE-A3SA-080	800	150	50	600		
	TSE-A3SA-045	450	100	50	300				TSE-A3SA-085	850	150	50	650		
	TSE-A3SA-050	500	100	50	350				TSE-A3SA-090	900	150	50	700		
	TSE-A3SA-055	550	150	50	350				TSE-A3SA-095	950	150	50	750		
	TSE-A3SA-060	600	150	50	400				TSE-A3SA-100	1000	150	50	800		

○ (Required length)

○ (Required length)

Please tighten the HEXAGON SOCKET HEAD CAP SCREWS surely after deciding the installation position.

a reduced drawing (A3size~)

Q'ty:

図層 CHANGE NOTICE	承認 APPROVED	検図 CHECKED	製図 DRAWN takahashi		名称 TITLE TSE-A3SA-□ CAPACITANCE TYPE LEVEL SENSOR
	第三角法 THIRD ANGLE PROJECTION	尺度 SCALE 1:2	日付 DATE Sep,26,2016	東和制電工業株式会社 TOWA SEIDEN INDUSTRIAL CO., LTD.	図面番号 DRG. No. HE-14017